actual size

SMD Quartz Crystal · JXS21

- 4 Pad Version, 2.0 x 1.6 mm
- ± 10 ppm type available
- special type for IoT available, see JXS21-WA datasheet
- reflow soldering temperature: 260 °C max.
- ceramic / metal package

RoHS compliant · Pb free · REACH compliant · Conflict mineral free

GENERAL DATA

TYPE	JXS21
frequency range	16.0 ~ 80.0 MHz (fund. AT-cut)
frequency tolerance at 25 °C	± 10 ppm / ± 20 ppm / ± 30 ppm
load capacitance C_L	6 pF / 8 pF / 10 pF / 12 pF standard
	(option: 6 pF ~ 30 pF / series)
shunt capacitance C_0	< 5 pF
storage temperature	-40 °C ~ +105 °C
drive level max.	100 µW (10 µW recommended)
aging	< ± 3 ppm first year
	(< ± 1 ppm first year for tol. ± 10 ppm on request)

TABLE 1: FREQUENCY STABILITY VS. TEMPERATURE

		± 10 ppm	± 15 ppm	±20 ppm	±30 ppm	±50 ppm
-20 °C ~ +70 °C	STD.	O	O	O	O	O
-40 °C ~ +85 °C	T1		O	O	O	O
-40 °C ~ +105 °C	T2				O	O

O available

ESR (SERIES RESISTANCE RS)

frequency in MHz	vibration mode	ESR max. in Ω	ESR typ. in Ω
16.0 ~ 19.999	fund. - AT	150	120
20.0 ~ 29.999	fund. - AT	100	70
30.0 ~ 35.999	fund. - AT	80	50
36.0 ~ 53.999	fund. - AT	50	40
54.0 ~ 80.000	fund. - AT	50	35

MARKING

frequency with load capacitance code
company code / date code / internal code

date code: year/month; A ~ M: Jan. - Dec.; example: 4A = 2024 January

4: 2024 5: 2025 6: 2026 7: 2027 8: 2028 9: 2029

Jan.	Febr.	Mar.	Apr.	May	June
A	B	C	D	E	F
July	**Aug.**	**Sept.**	**Oct.**	**Nov.**	**Dec.**
G	H	J	K	L	M

DIMENSIONS

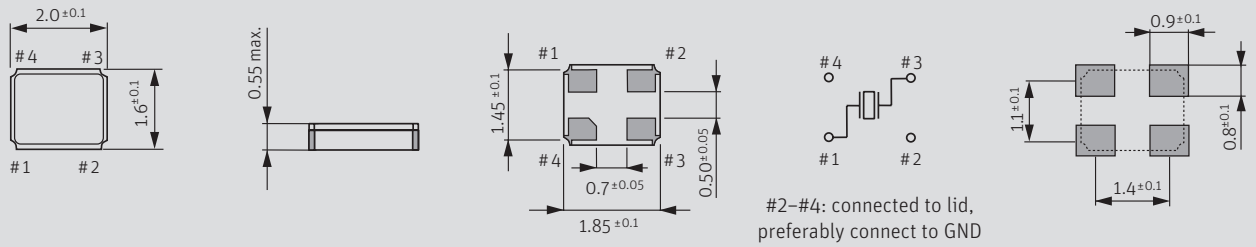

top view · side view · bottom view · #2–#4: connected to lid, preferably connect to GND · crystal connection · pad layout · in mm

ORDER INFORMATION

Q	frequency	–	type	–	load capacitance	–	tolerance at 25 °C	–	stability vs. temp. range	–	option
Quartz	16.0 ~ 80.0 MHz		JXS21		6/8/10/12 pF standard 6 pF ~ 30 pF available S for series		10 = ± 10 ppm 20 = ± 20 ppm 30 = ± 30 ppm		10 = ± 10 ppm 15 = ± 15 ppm 20 = ± 20 ppm 30 = ± 30 ppm 50 = ± 50 ppm		blank = -20 °C ~ +70 °C T1 = -40 °C ~ +85 °C T2 = -40 °C ~ +105 °C FU = for fundamental frequencies ≥ 20 MHz

Example: Q 26.0-JXS21-8-10/20-T1-FU-LF (Suffix LF = RoHS compliant / Pb free)

©JQG 2025

Jauch Quartz GmbH • e-mail: info@jauch.com • full data can be found under: www.jauch.com

All specifications are subject to change without notice

TAPING SPECIFICATION

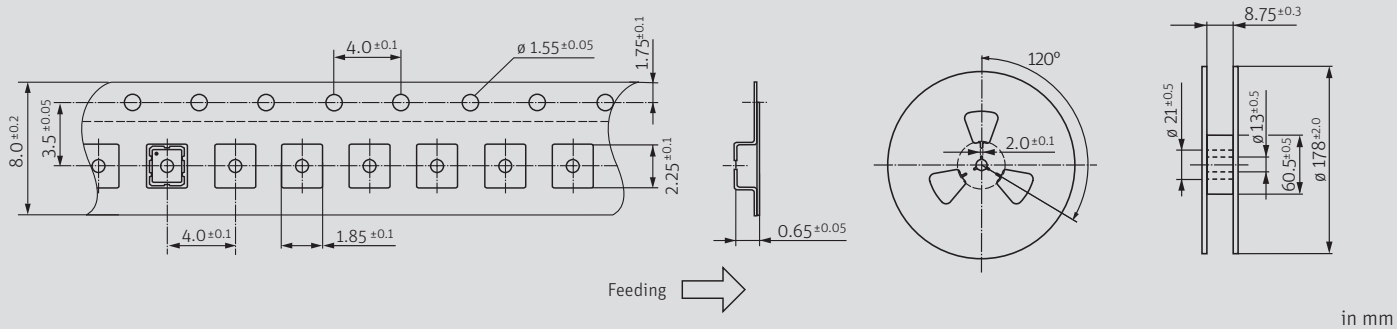

REFLOW SOLDERING PROFILE

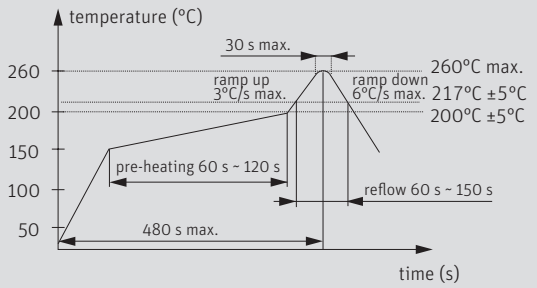

note: parts are also suitable for soldering systems with lead (Pb) content

LOAD CAPACITANCE CODES

6 pF: q	13 pF: v	22 pF: g	series: s
7 pF: m	14 pF: x	24 pF: d	T: 3rd OT
8 pF: k	15 pF: j	25 pF: r	
9 pF: n	16 pF: b	27 pF: w	
10 pF: h	17 pF: t	30 pF: .	
11 pF: l	18 pF: f		
12 pF: a	20 pF: c		

example 26.0 MHz / 8 pF: 26k00

* hand soldering temperature should not exceed 280 °C

©JQG 2025

Jauch Quartz GmbH • e-mail: info@jauch.com • full data can be found under: www.jauch.com

All specifications are subject to change without notice